FOR YOU AND THE FAMILY

BUSHWAKKA
ADVENTURE TRAILERS
AFRICA
ESTABLISHED 1997

NEW Bhoma OFF-ROAD CARAVAN *"Born of this EARTH"*

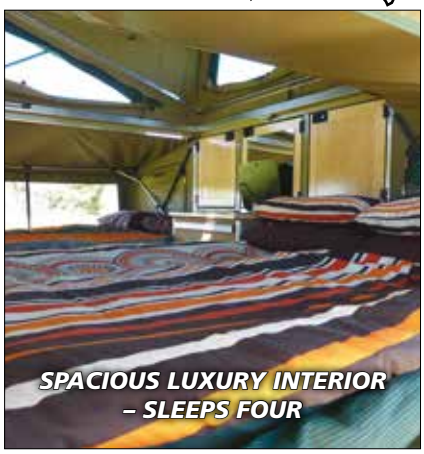

SPACIOUS LUXURY INTERIOR – SLEEPS FOUR

COMPACT DESIGN BUILT FOR OFF-ROAD

HOT WATER SHOWER

WASH UP AREA WITH HOT WATER

LARGE KITCHEN WORK SURFACE

LARGE OUT DOOR RELAXING AREA

DOUBLE BUSH-FAN 360° AWNING

13 KRONE STREET • PO BOX 349, WORCESTER 6849 • SOUTH AFRICA
Tel: +27 (0)23 342 3438 • Cell: +27 (0)82 773 7544 • Fax: +27 (0)23 342 8469
E-mail: sales@bushwakka.co.za • www.bushwakka.co.za
www.youtube/4x4campingtrailer/bhoma

Bhoma Off-Road Caravan

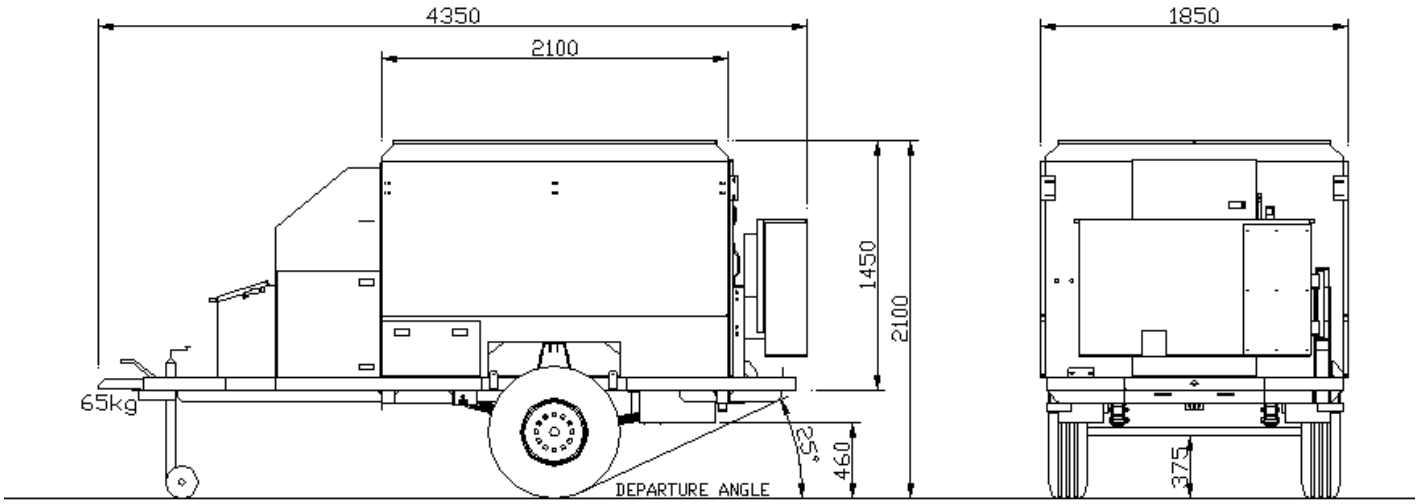

Construction: 3CR12 stainless steel and aluminium body

with 3CR12 chassis.

Heavy duty progressive rated 1,1 m leaf springs,

with Safari gas shocks.

Braked axle	:	2,5 ton
Spring rating	:	2,2 ton
Tarre	:	900 kg
GVM	:	1500 kg
Nose weight	:	65 kg